TecFluid
The art of measuring

Level gauges
Series LT

Level indicator, switch and transmitter for liquids

- Simple construction
- Resistant under extreme temperature and pressure conditions
- No risk of leakage
- Excellent chemical resistance
- Measuring range: from 150 mm to 15 m
- Accuracy: ±10 mm
- Connections:
  - EN 1092-1 or ASME B16.5 flanges. Other flange standards on request (JIS,...)
  - BSP or NPT threaded connections

  Other connections on request
- Materials: EN 1.4404 (AISI 316L), PVC, PP, PVDF, PTFE, PVC-C. Others on request
- Local indication:
  - By means of external float in a glass tube
  - By means of magnetic strips
- Options:
  - Switches. Optional with Ex d IIC T6 Explosion Proof Enclosure (ATEX certified)
  - Electronic transmitter with 4-20 mA analog output for safe or hazardous area (Ex ia or Ex d protection, ATEX certified). HART, PROFIBUS, FIELDBUS, MODBUS RTU protocols available on request

Ex HART COMMUNICATION PROTOCOL

Modbus

Working principle

According to communicating vessels principle. A float submersed in a chamber communicated with the tank whose liquid level needs to be measured floats on liquid surface and moves together with it, as level increases or decreases.

The float is designed for the specific working liquid density and shows the tank level by means of magnetic coupling with an external float or with a magnetic strips rail (depending on model). Both of them are mounted externally and isolated of the level gauge chamber.

Applications

- Chemical and petrochemical industries
- Process industry
- Thermal plants and cryogenic installations
- Ship industry
- Boilers
- Storage installations

Models

- LT.../ : indication by means of external float in a borosilicate glass tube. Graduated scale in cm included. Maximum liquid temperature for AISI 316L versions: 400ºC
- LTL.../ : indication by means of bi-color magnetic strips (red -white) mounted in an anodized aluminium rail with polycarbonate cover. Optional graduated scale in cm. Maximum liquid temperature for AISI 316L versions: 200ºC

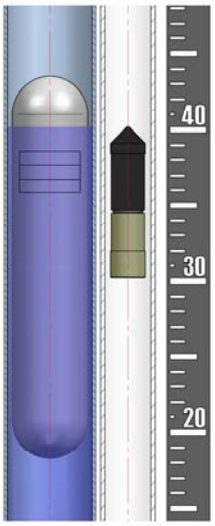

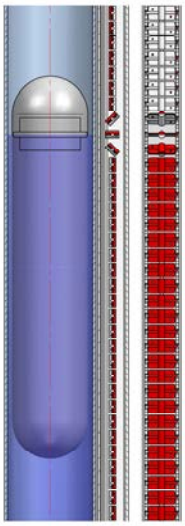

- LT ... LTL106 body in AISI 316L, flanged connection
- LT ... LTL116 body in AISI 316L, threaded connection
- LT ... LTL14 body in PVC, PVC-C, PP or PVDF, flanged connection
- LT ... LTL15 body in AISI 316L with internal PTFE coating, flanged connection

Technical data

- Accuracy: ±10 mm
- Scale in cm for LT models
  For LTL models, scale in cm available on request
- Liquid density: 0.55 ... 2 kg/l (others on request)
- Liquid viscosity: 1500 cSt maximum
- Measuring range: 150 mm ... 15 m
- Liquid temperature:
  - LTL106 / AISI 316L: -20ºC ... +200ºC
  - LT106 / AISI 316L: -20ºC ... +400ºC, depending on config.
  - LT ... LTL14 / PVC: 0ºC ... +45ºC
  - LT ... LTL14 / PVC-C: 0ºC ... +70ºC
  - LT ... LTL14 / PP: -10ºC ... +80ºC
  - LT ... LTL14 / PVDF: -20ºC ... +145ºC
  - LT ... LTL15 / PTFE: -20ºC ... +150ºC
- Ambient temperature: -20ºC ... +80ºC
- Nominal pressure:
  - Models in AISI 316L: PN16 ... PN40 (up to PN100 on request)
  - Models in PVC, PVC-C, PP, PVDF: PN10 Floats 6 bar max.
  - Models in PTFE: PN16 ... PN40
- Connections:
  - EN 1092-1 or ASME B16.5 flanges. Other flange standards on request (JIS,...)
  - BSP or NPT threaded connections (for LT … LTL116)

  Other connections on request
- Mounting: vertical, tank side
- Certificate Type Approval for ship, "offshore" and industry in general, models LTL106 and LTL116 (up to PN25 / 150# RF) by Lloyd´s Register

Limit switches and transmitters

- LT ... LTL-APR: adjustable reed switches
- LT-AAR: adjustable reed switches (high temperature version)
- LT ... LTL-AMM: adjustable micro-switches
- LT ... LTL-AMD: adjustable inductive switches (+ relays on request)

  All switches can be supplied in Ex d IIC T6 version on request
- LTE: Resistive sensor. 4-20 mA output:
  - TR3420: 24 VDC 2-wire system, compact or DIN rail mounted, for safe area and with ATEX certificate Ex d
  - TR2420: 24 VDC 2-wire system, compact mounted, for safe area and with ATEX certificate Ex ia, and HART, PROFIBUS, FIELDBUS,... protocols
- LTDR: Guided radar transmitter 4-20 mA, 4-wire system. Ex version available on request

Mounting

The lower dimension LD, LP or LPV of series LT level gauges is variable depending on liquid density. The lower the density, the longer this dimension. To remove the float due to a change in density, maintenance,..., a minimum distance LMS, longer or equal to LD distance, must be kept between the lowest side of the level gauge and the floor.

Model	Liquid density kg/l	Lower dimension			Upper dimension		
		Without drain (LD)	With drain (LP)	With drain + valve (LPV)	Without vent (LS)	With vent (LV)	With vent + valve (LVV)
LT ... LTL / AISI 316L (PN16 ... 40)	0.55 ... 0.59	430	445	590	130	155	300
	0.60 ... 0.91	340	355	500			
	≥ 0.92	260	275	420			
LT ... LTL / PVC (PN10)	0.60 ... 0.79	400		525	150	140	265
	0.80 ... 0.89	310		435			
	≥ 0.90	240		365			
LT ... LTL / PP (PN10)	≥ 0.70	240		365	150	165	290
LT ... LTL / PVDF (PN10)	0.80 ... 0.89	415		540	150	165	290
	0.90 ... 0.99	340		465			
	1.00 ... 1.19	290		415			
	≥ 1.20	240		365			

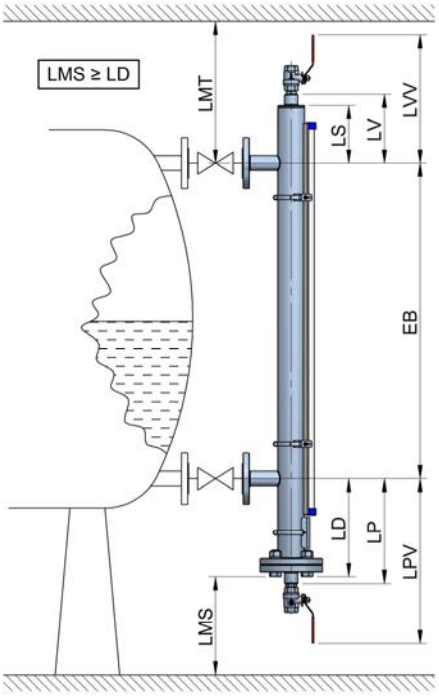

Materials

Models LT

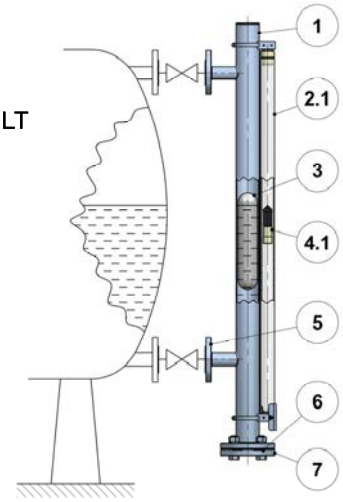

Models LTL

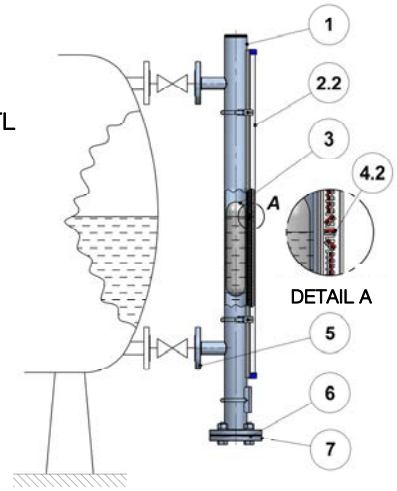

Nº	Description	Models LT					Models LTL				
		EN 1.4404	PVC	PP	PVDF	PTFE	EN 1.4404	PVC	PP	PVDF	PTFE
1	Body	EN 1.4404	PVC	PP	PVDF	PTFE + EN 1.4404	EN 1.4404	PVC	PP	PVDF	PTFE + EN 1.4404
2.1	Guide tube	Borosilicate glass					— — —				
2.2	Mag strips rail	— — —					Aluminium + Polycarbonate				
3	Float	EN 1.4404 / Titanium	PVC	PP	PVDF	PTFE	EN 1.4404 / Titanium	PVC	PP	PVDF	PTFE
4.1	External float	PP / Aluminium					— — —				
4.2	Mag strips	— — —					POM resin				
5	Connection	EN 1.4404	PVC	PP	PVDF	PTFE	EN 1.4404	PVC	PP	PVDF	PTFE
6	Gasket	Belpa® CSA-50	NBR / Viton® / EPDM			PTFE	Belpa® CSA-50	NBR / Viton® / EPDM			PTFE
7	End connection	EN 1.4404	PVC	PP	PVDF	PTFE	EN 1.4404	PVC	PP	PVDF	PTFE

Float types

Material	Liquid density kg/l	Nominal pressure
Titanium	0.55 ... 0.83	PN40
Titanium	0.68 … 0.83	PN63
Titanium	0.77 … 0.83	100 bar max.
EN 1.4404	0.84 ... 2.00	PN40
EN 1.4404	0.84 ... 2.00	PN63
EN 1.4404	0.84 ... 2.00	PN100
PVC	0.60 ... 2.00	6 bar max.
PP	0.70 ... 2.00	6 bar max.
PVDF	0.80 ... 2.00	6 bar max.

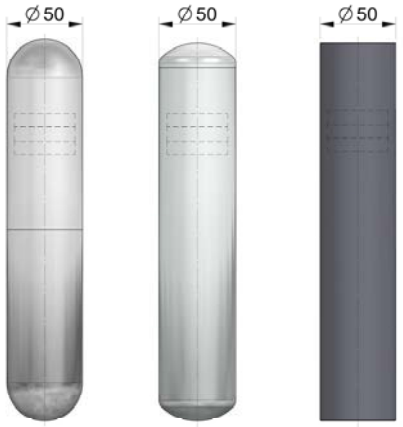

EN 1.4404 Titanium Plastic

Dimensions and specific technical data

Models LT ... LTL106 ... 116 / LT ... LTL17

Technical data

- **Material:** EN 1.4404 (AISI 316L)
- **Measuring range:** 150 ... 15000 mm (supplied in separate sections for measuring ranges longer than 5500 mm; one single section on request). Longer ranges on request.
- **Liquid temperature:**
  - -20ºC ... +200ºC: magnetic strips indication
  - -20ºC ... +400ºC: glass tube indication
- **Nominal pressure:** PN16 ... PN40 (up to PN100 on request)
- **Connections:**
  - LT ... LTL106: DN15 ... DN50 EN 1092-1 flanges (other flange standards and sizes on request)
  - LT ... LTL116: G½ ... G2 threaded connection (other thread standards and sizes on request)
- **Limit switches:** LT ... LTL-APR / AMM / AMD // LT-AAR Ex d IIC T6 version on request
- **Transmitter** LTE 4-20 mA or guided radar LTDR

LT ... LTL106

LT ... LTL116

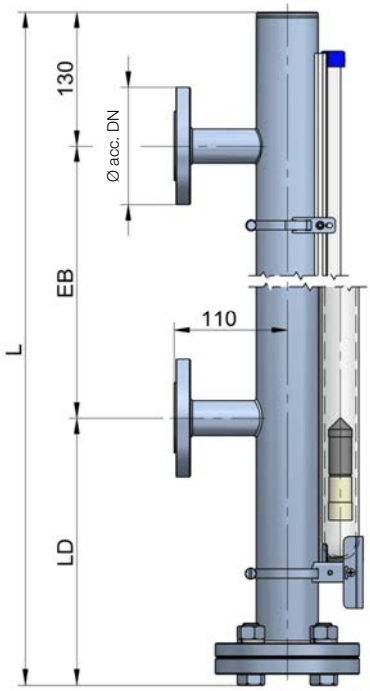

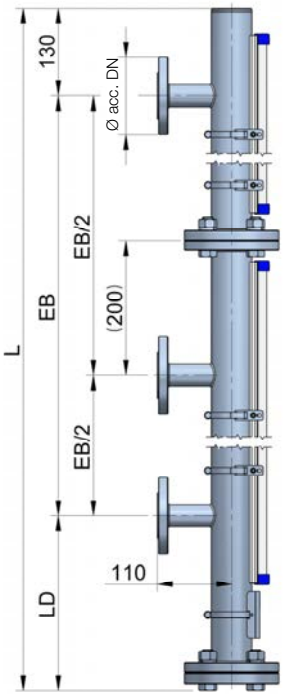

Separate sections

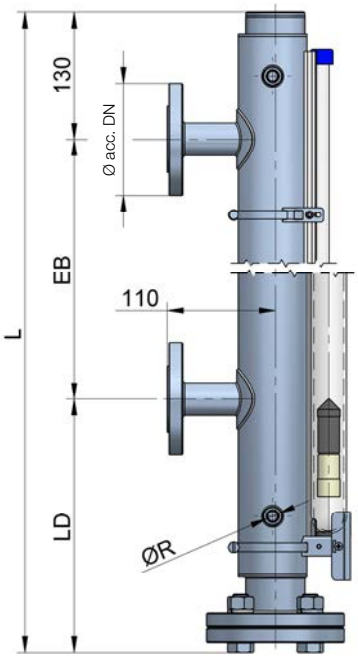

Heating-cooling chamber

Special models LT ... LTL17

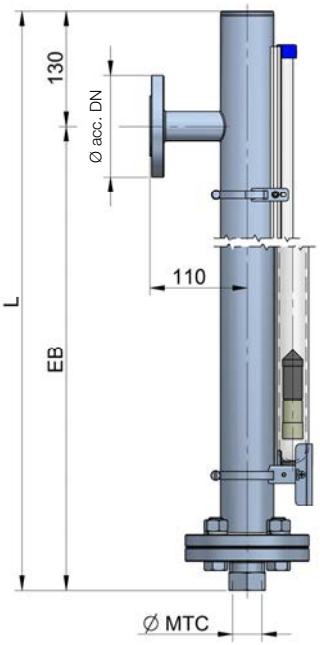

LT ... LTL17P

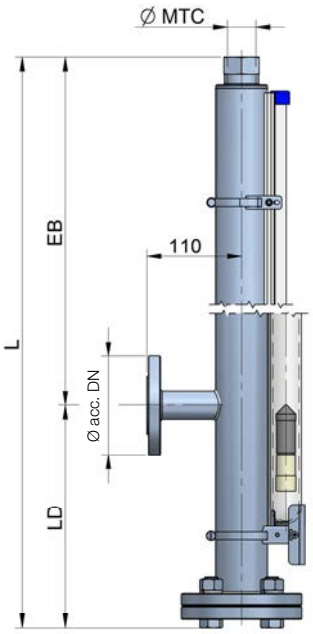

LT ... LTL17J

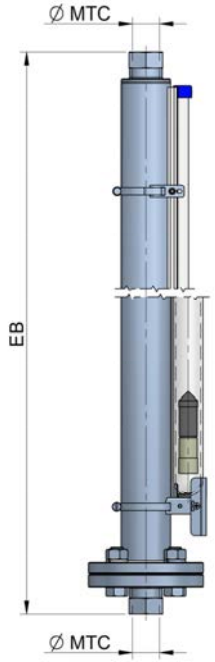

LT ... LTL17Y

Models LT ... LTL15 / PTFE

Technical data

- **Material:** EN 1.4404 (AISI 316L) with internal PTFE coating
- **Measuring range:** 6000 mm max. Others on request
- **Liquid temperature:** -20ºC ... +150ºC
- **Nominal pressure:** PN16 ... PN40
- **Connections:** DN15 ... DN50 EN 1092-1 flanges (other flange standards and sizes on request)
- **Limit switches:** LT ... LTL-APR / AMM / AMD Ex d IIC T6 version on request
- **Transmitter** LTE 4-20 mA or guided radar LTDR

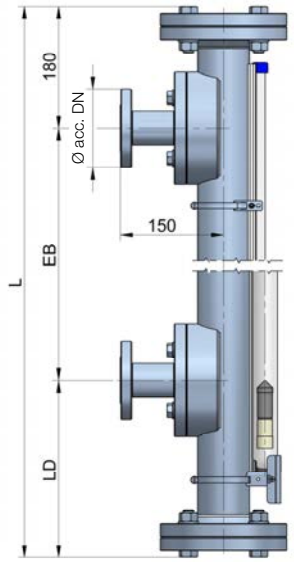

Models LT ... LTL14 / PP, PVC, PVC-C, PVDF

Technical data

- **Material:** PP, PVC, PVC-C, PVDF
- **Measuring range:** 6000 mm max. Others on request
- **Liquid temperature:**
  PP: -10ºC ... +80ºC
  PVC: 0ºC ... +45ºC
  PVC-C: 0ºC ... +70ºC
  PVDF: -20ºC ... +145ºC
- **Nominal pressure:** PN10
- **Connections:** DN15 ... DN50 EN 1092-1 flanges except LT ... LTL14 / PVC, ISO 1452-3 flanges (other flange standards and sizes on request)
- **Limit switches:** LT ... LTL-APR / AMM / AMD Ex d IIC T6 version on request
- **Transmitter** LTE 4-20 mA or guided radar LTDR

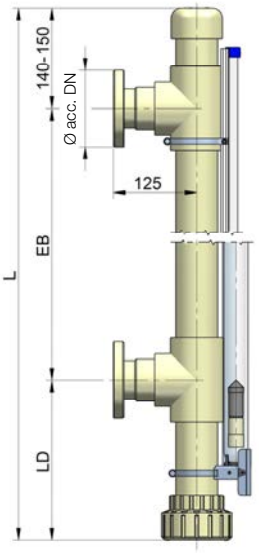

Limit switches

Adjustable switch LT ... LTL-APR

- SPDT bi-stable reed switch
- IP65 polycarbonate housing
- Contact rating: 0.5 A 220 VAC 60 VA
- Hysteresis: ±6 mm
- Liquid temperature: -20ºC ... +250ºC
- Ambient temperature: -10ºC ... +70ºC
- Suitable for ATEX hazardous area “Simple apparatus”

Adjustable switch LT-AAR

- SPDT bi-stable reed switch
- Aluminium housing & thermal separator for high temperature
- Contact rating: 0.5 A 220 VAC 60 VA
- Hysteresis: ±6 mm
- Liquid temperature: -20ºC ... +400ºC
- Ambient temperature: -10ºC ... +70ºC
- Suitable for ATEX hazardous area “Simple apparatus”

Adjustable switch LT ... LTL-AMM

- SPDT bi-stable micro-switch
- IP65 coated aluminium housing
- Contact rating: 3 A 220 VAC
- Hysteresis: ±6 mm
- Liquid temperature: -20ºC ... +250ºC
- Ambient temperature: -25ºC ... +80ºC
- Mechanical life: 20 x 10^6 operations
- Suitable for ATEX hazardous area “Simple apparatus”

Adjustable switch LT ... LTL-AMD

NAMUR (EN 60947-5-6) 3.5 mm slot type bi-stable inductive detector activated by vane, mounted in an aluminium housing.

- Nominal voltage: 8.2 V / Operating voltage: 5 … 25 V
- Liquid temperature: -20ºC … +250ºC
- Ambient temperature: -25°C ... +100°C
- ATEX certificate Ex ia IIC T6 … T1 Ga / Ex ia IIIC T85ºC Da

Control relay (on request)

NAMUR input (EN 60947-5-6) for 1 or 2 inductive detectors.

- Power supply: 20 … 30 VDC
- Consumption: <1.3 W
- Relay output:
  - Vmax: 253 VAC / 2A // 40 VDC / 2A resistive load
- Ambient temperature: -20°C ... +60°C
- Ingress protection: IP20

Ex d IIC T6 version

All switches can be supplied with Ex d IIC T6 Explosion Proof Enclosure on request, ATEX certified

LT ... LTL-APR

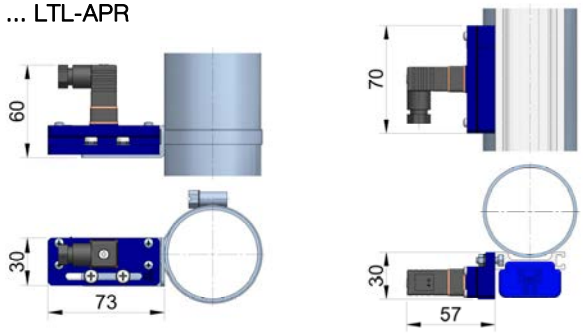

LT-AAR

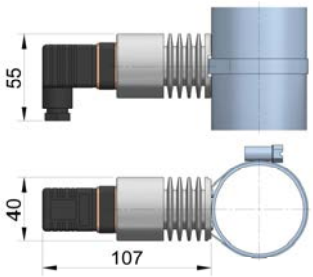

LT ... LTL-AMM / AMD

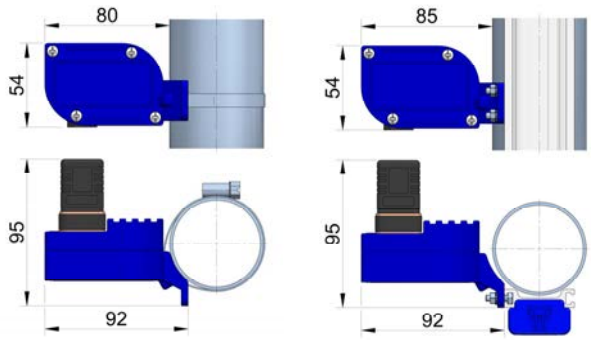

ATEX version Ex d IIC T6

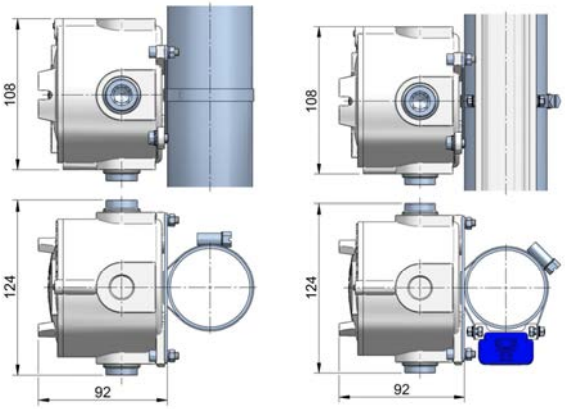

Transmitters

Transmitter LTE 4-20 mA

Transmitter composed of a resistive sensor based on a reed and resistances chain, mounted on a printed circuit placed inside a guide tube. Not wetted by the process liquid.

Variations in level inside the tank move the internal LT or LTL float, which by means of magnetic coupling changes the value of the resistance of the resistive sensor in correspondence to the measured liquid level.

These variations of resistance are processed by an electronic converter in order to obtain a 4-20 mA current output proportional to liquid level.

Technical data LTE

- Connection by means of IP65 connector, IP67 polycarbonate housing or IP68 aluminium housing
- Distance between reed switches: 10 mm
- Liquid temperature: -20ºC ... +250ºC
- Ambient temperature: -20ºC ... +60ºC

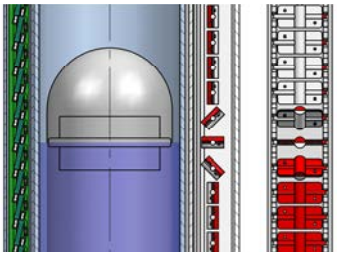

Transmitters series TR

- 2-wire system with 4-20 mA output
- TR3420 safe area or hazardous area ATEX Ex d IIC T6
  - Power supply: 12 ... 36 VDC
  - Consumption: 0.8 W
  - Configuration by means of USB cable and software Winsmeter TR available for download at www.tecfluid.com
- TR2420Ex hazardous area ATEX Ex ia IIC T6
  - Power supply: 8 ... 30 VDC
- TR2420H (HART protocol), TR2420FP (Fieldbus/Profibus protocol). Also available in combination with their ATEX Ex ia versions

Transmitter LTDR

LTDR guided radar level transmitter uses TDR (Time Domain Reflectometry) technology.

Low-energy, high-frequency electromagnetic impulses, generated by the sensor's circuitry, are propagated along the probe which is immerged in the liquid to be measured.

When these impulses hit the surface of the liquid, part of the impulse energy is reflected back up the probe to the circuitry which then calculates the fluid level from the time difference between the impulses sent and the impulses reflected. The sensor can output the analyzed level as a continuous level measurement.

For more details, see LTDR guided radar level transmitter datasheet. Available at www.tecfluid.com

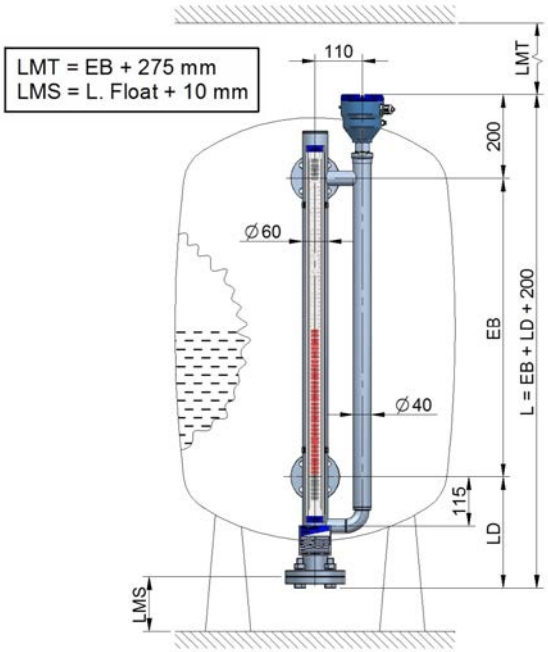

Electronic converter

Model MT03L

- Electronic converter for level applications
- Resistance and current inputs
- Programmable via USB cable by means of Tecfluid S.A. Winsmeter MT03 software or by means of keyboard and graphic display with intuitive menus
- Panel mounting with dimensions 96 x 96 mm DIN 43700
- Power supply: 100 … 240 VAC 50 / 60 Hz
  18 … 36 VDC
- Full diagnosis. User selectable password protection
- 5 digits level indication
- Programmable 4-20 mA analog output
- 2 x relay outputs programmable as level alarms
- Ingress protection: IP50 front, IP30 back
  (Optional IP65 front with silicone cover)
- Ambient temperature: -20ºC ... +60ºC
- MODBUS RTU RS485 protocol on request

MT03L

PRESENCE IN MORE THAN 50 COUNTRIES ALL OVER THE WORLD

The art of measuring

Tecfluid S.A.
Narcís Monturiol 33
08960 Sant Just Desvern
Barcelona
Tel: +34 93 372 45 11
tecfluid@tecfluid.com
www.tecfluid.com

Quality Management System ISO 9001 certified by

Pressure Equipment Directive certified by

ATEX European Directive certified by

HART is a registered trademark of the FieldComm Group™

R-CT-LT Rev. 3 english version